RWS Platform Scale

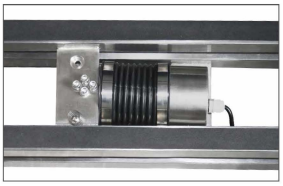

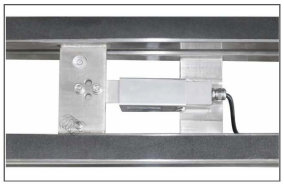

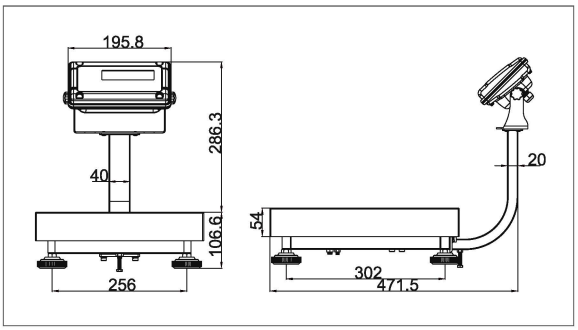

Features

Aluminum die east, mild steel, Stainless steel structure selectable
Stainless steel weighing plate,
Aluminum load cell, stainless steel load cell selectable
Normal load cell, OIML load cell, NTEP load cell selectable
Level indicator and leveling feet for precise leveling of the scale

Different load cell connection selectable (air connector, 5/7/9 pin air connector)
Different platform sharp selectable (square or rectangle)
Different platform size selectable (platform can select 300x240mm, 320x360mm, 400x500mm)
Luxury model or economic model selectable

Customize platform size, cable length and load cell connector
Optional pole bracket, pole
Optional status discharge kit and grounding connection
Optional load cell protection kit (only for aluminum load cell)

Standard

Factory Option

Model	Weighing Capacity [Max] kg	Readability [d]g	Verification Value [e]g	Division	Approx.weight kg	Approval
RWS-3024-15K-M	15	5	5	3,000d	6.5	CE, OIML
RWS-3236-30K-MR	30	10	10	3,000d	8.7	CE, OIML