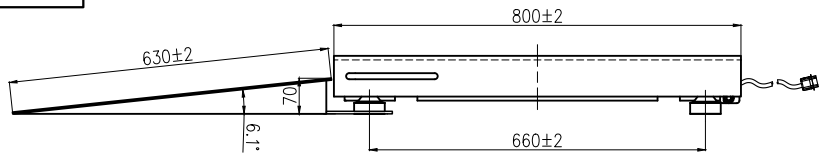

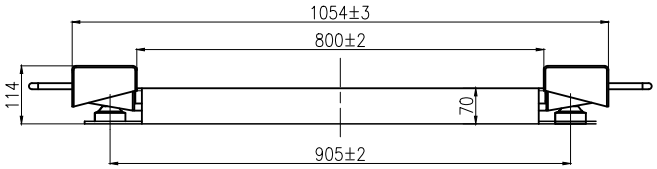

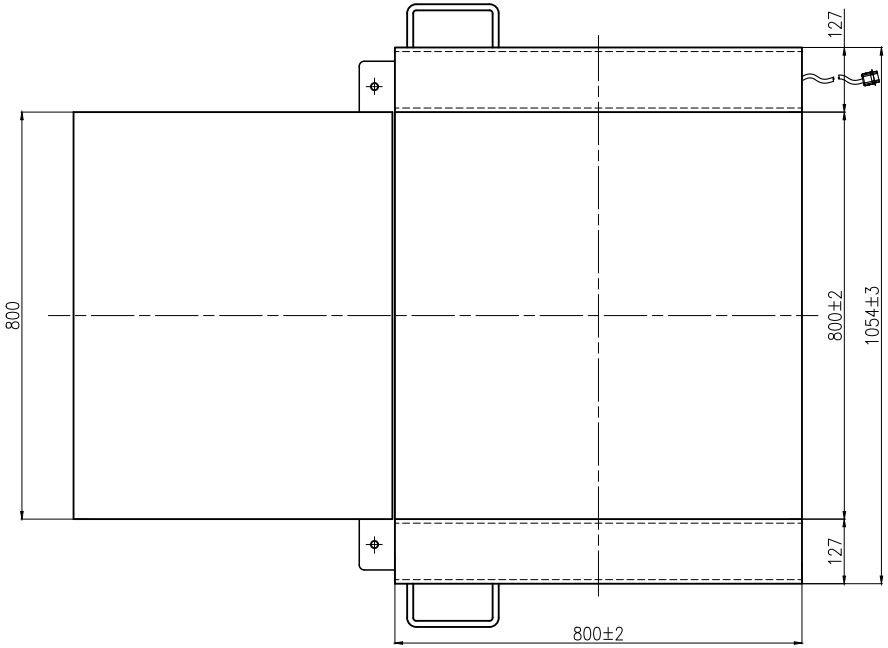

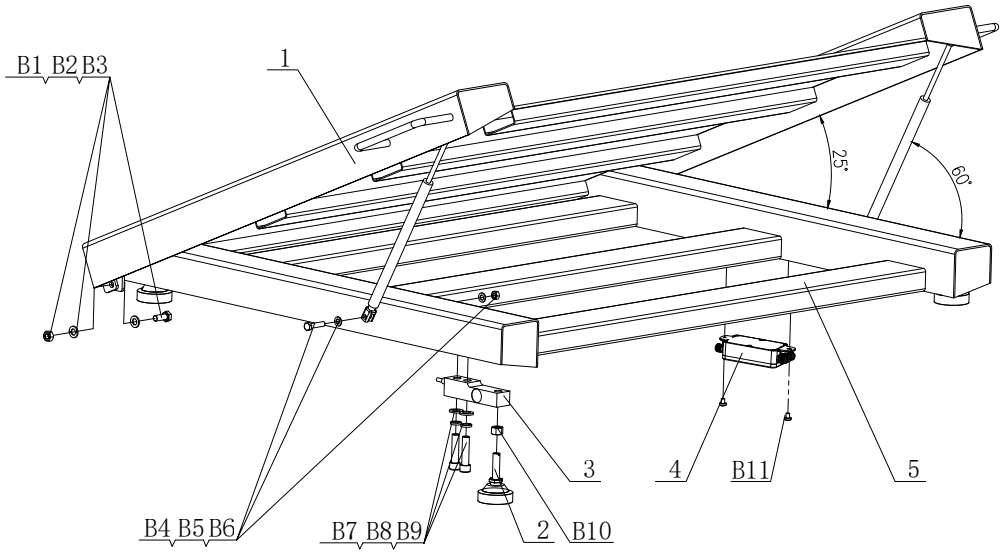

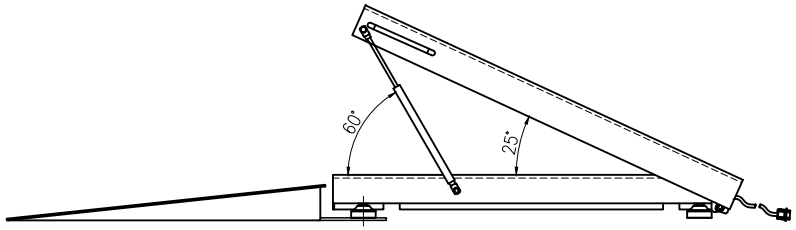

Top plate lifted state

S/N	Code	Name(mm)	Quantity	Material	Weight(kg)	Remark
B11		Cross disc head screw M6X8	2			
B10		Nut M12	4			
B9		Spring washer Ø12	8			
B8		Flat washer Ø12	8			
B7		Hexagon socket head screw M12X50	8			
B6		Nut M8	2			
B5		Flat washer Ø8	6			
B4		Outer hex bolt M8X35	4			
B3		Nut M10	2			
B2		Flat washer Ø12	4			
B1		Outer hex bolt M10X25	2			

S/N	Code	Name(mm)	Quantity	Material	Weight(kg)	Remark
5		Bottom frame	1			
4		Junction box	1			
3		Load cell	4			
2		Foot	4			
1		Top frame	1			

Mark	Revise	partition	Reversion	Sign	Date

Design			Craft		
Drawing			Standardization		
Check			Approval		
Review			Date		

General Assembly Drawing

AAKATALO

WSS-C-1
0.8mX0.8m-300kg

Pattern marker	Weight	Scale
		1:10